CLASSIC - FV133A/K3H.0

Deck mounted Roman diverter valve and handshower assembly.

Ducha manual con válvula derivadora para hidromasaje.

FRANZ VIEGENER

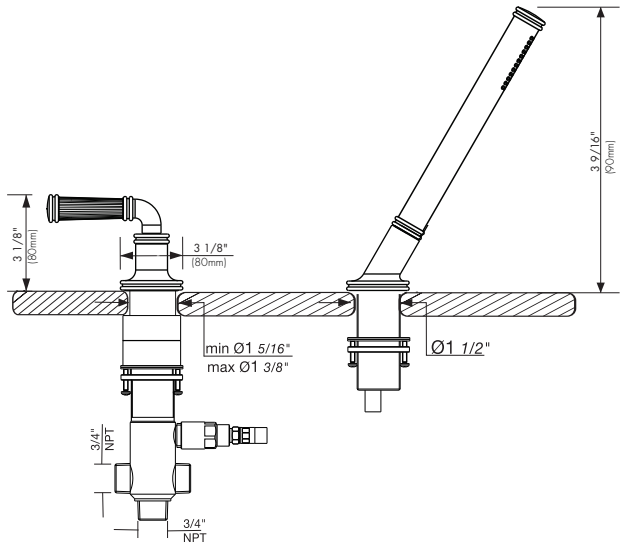

FEATURES
CARACTERÍSTICAS

- Brass diverter valve.
  Válvula derivadora fabricada en latón.
- 3/4" inlet NPT connection.
  Conexiones de 3/4".
- Quarter-turn to diverter.
  Válvula derivadora de 1/4 de giro.

COLOR / FINISHES
COLOR / ACABADOS

- PC *Polished Chrome.*
- PN *Polished Nickel* - PVD
- BN *Brushed Nickel* - PVD
- BG *Brushed Gold* - PVD
- PG *Polished Gold* - PVD
- RG *Rose Gold* - PVD
- FB *Flat Black.*
- UPB *Unlacquered Polished Brass.*
- SGR *Satin Greystone* - PVD
- BB *Brushed Brass* - PVD

FLOW RATE
CAUDAL

- Minimum flow rate 1,7 gpm (6,5 L/min) at 45 PSI
  Maximum flow rate 1,6 gpm (6,0 L/min) at 80 PSI

ITEM DETAILS
DETALLE DE PRODUCTO

COMPLIANCE
CERTIFICACIONES

UPC C ®

WaterSense Meets EPA Criteria
Certified by IAPMO R&T